JESSI DINING CHAIR

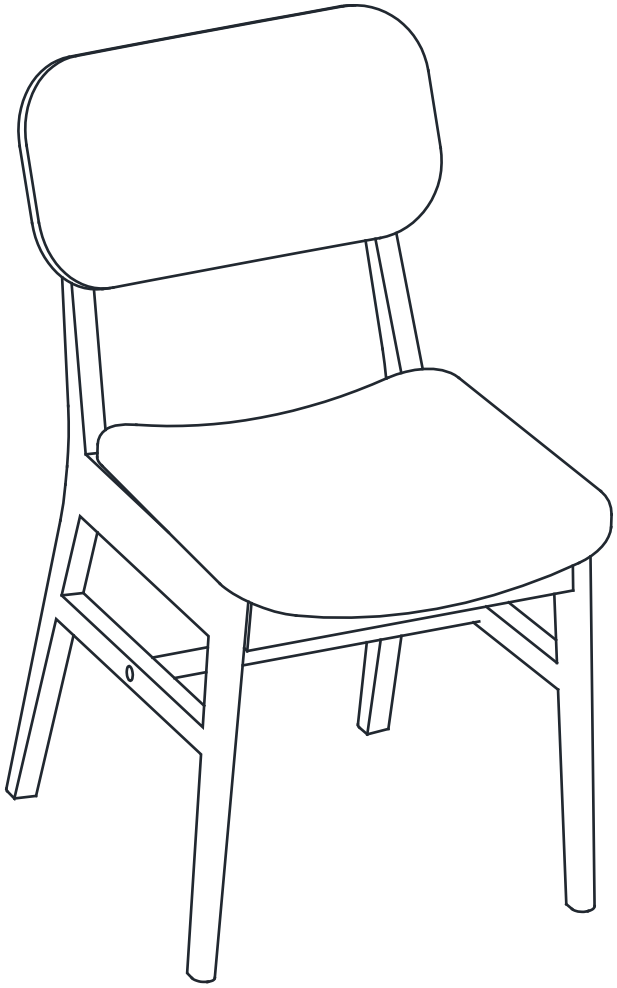

ASSEMBLY INSTRUCTION MONTERINGSANVISNING ASENNUSOHJEET EINBAUZEICHNUNG

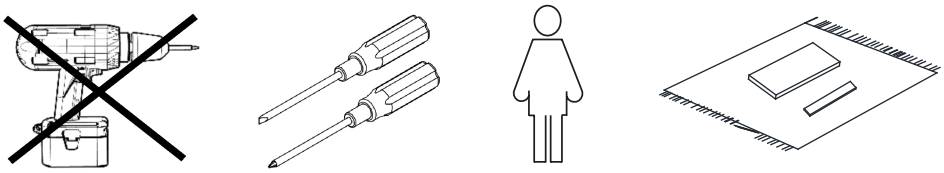

List of part

		N.o of pcs
①	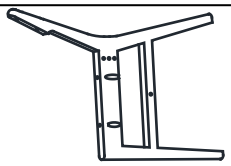	1
②	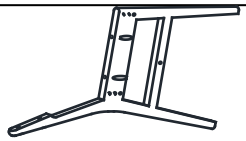	1
③	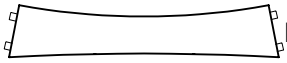 Front	1
④	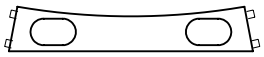 Back	1
⑤		1
⑥	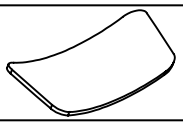	1
⑦	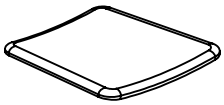	1

List of hardware

			N.o of pcs
A	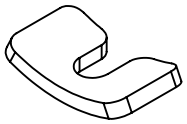		4
B		M8x45	4
C		M6x20	4
D	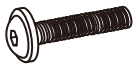	M6x30	2
E		Dia 6mm	1
F		Dia 4mm	1
G		5x40	10
H	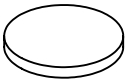	Φx20	4

Step 1

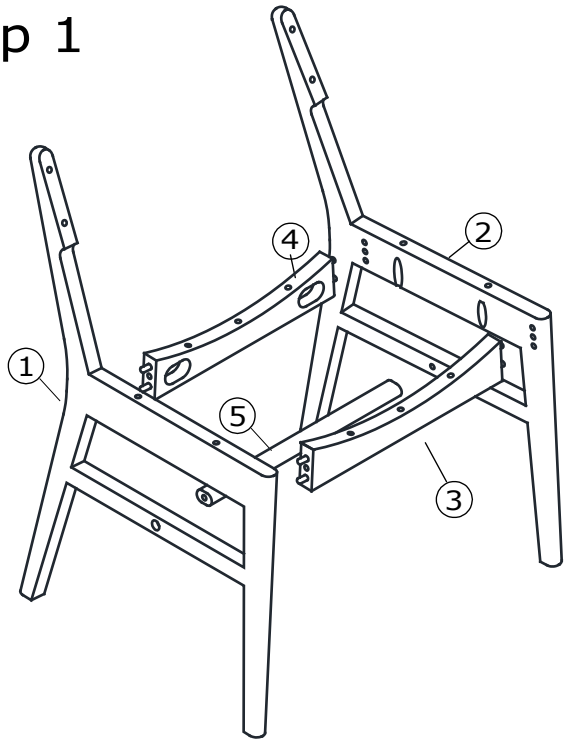

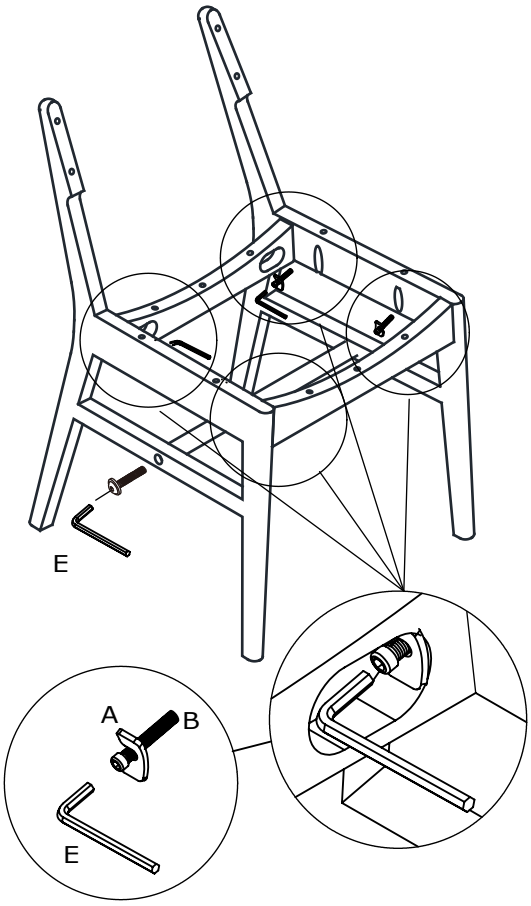

Step 2

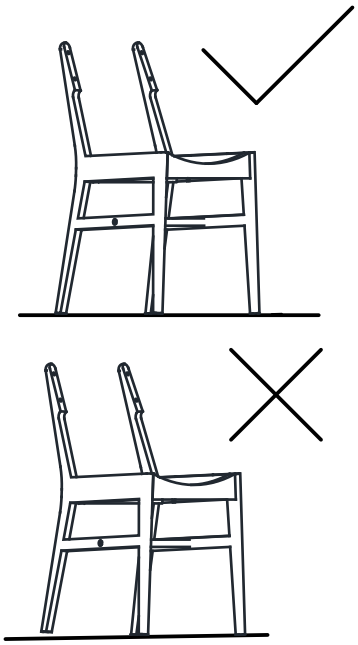

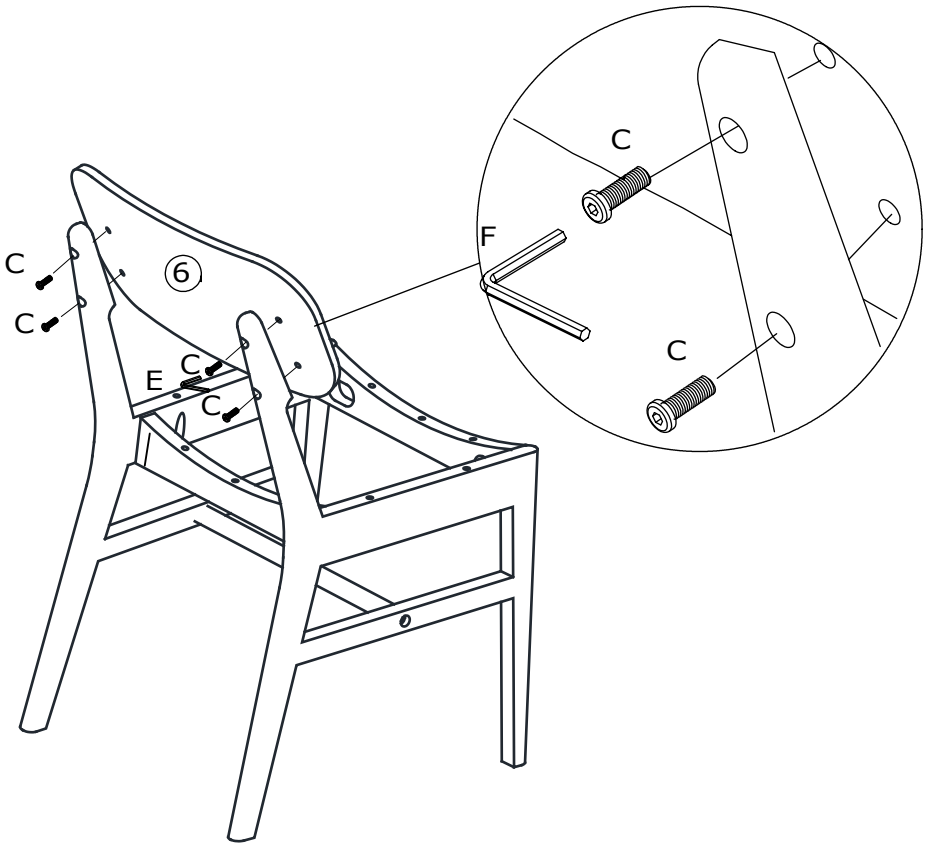

Step 3

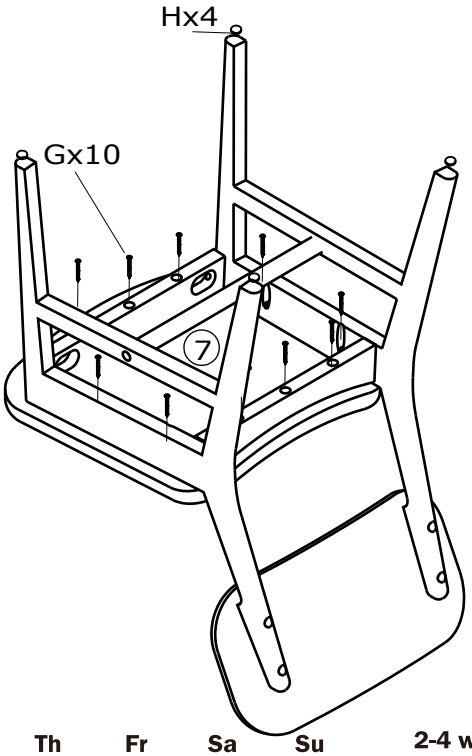

Step 4

Mo	Tu	We	Th	Fr	Sa	Su
1	2	3	4	5	6	7
⊗ 8	9	10	11	12	13	14
15	16	17	18	19	20	21
⊗ 22	23	24	25	26	27	28
29	30	31				

2-4 weeks/veckor

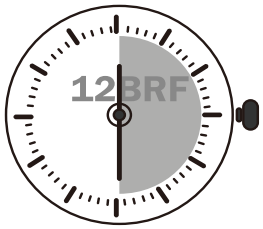

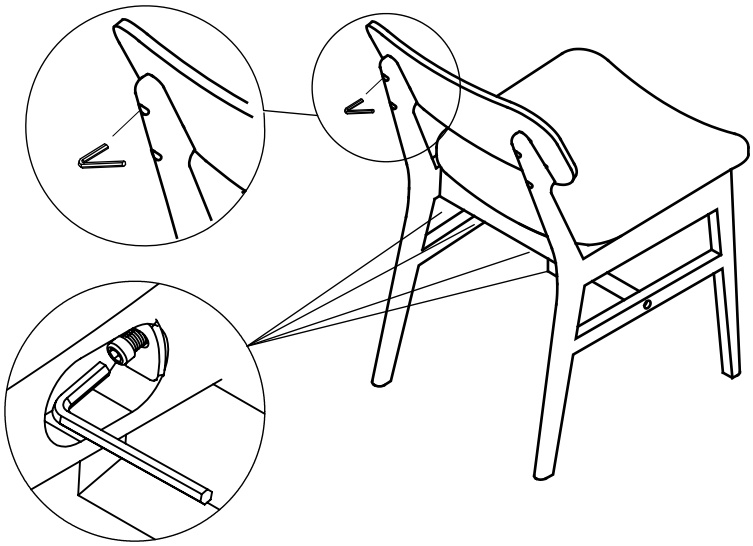

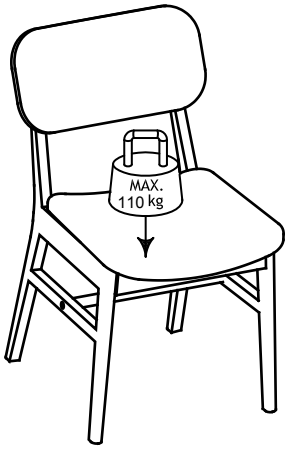

Tighten the screws regularly or if needed!

Efterspänn skruvarna regelbundet eller vid behov!