1594170
CANON Floor lamp
Manual

PLEASE READ THESE INSTRUCTIONS CAREFULLY BEFORE COMMENCING ASSEMBLY AND RETAIN FOR FUTURE REFERENCE.

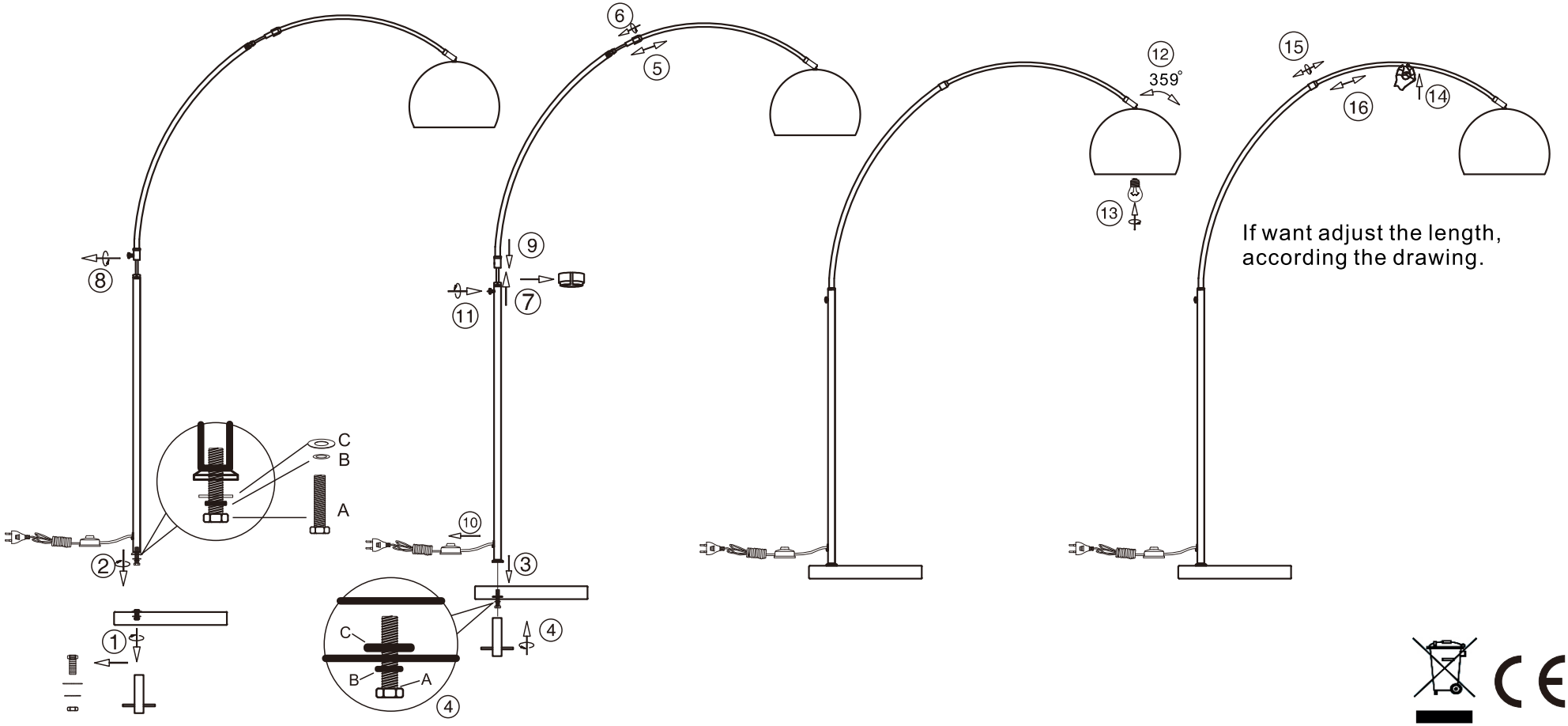

ASSEMBLY INSTRUCTIONS:

1. Screw the bulb (not provided) clockwise into the bulb holder.

CAUTION:

1. Do not exceed maximun wattage rating.
2. The supply cable or cord of this luminaire cannot be replaced; if the cord is damaged, the luminaire shall be destroyed.

Points de collecte sur www.quefairedemesdechets.fr
Privilégiez la réparation ou le don de votre appareil !