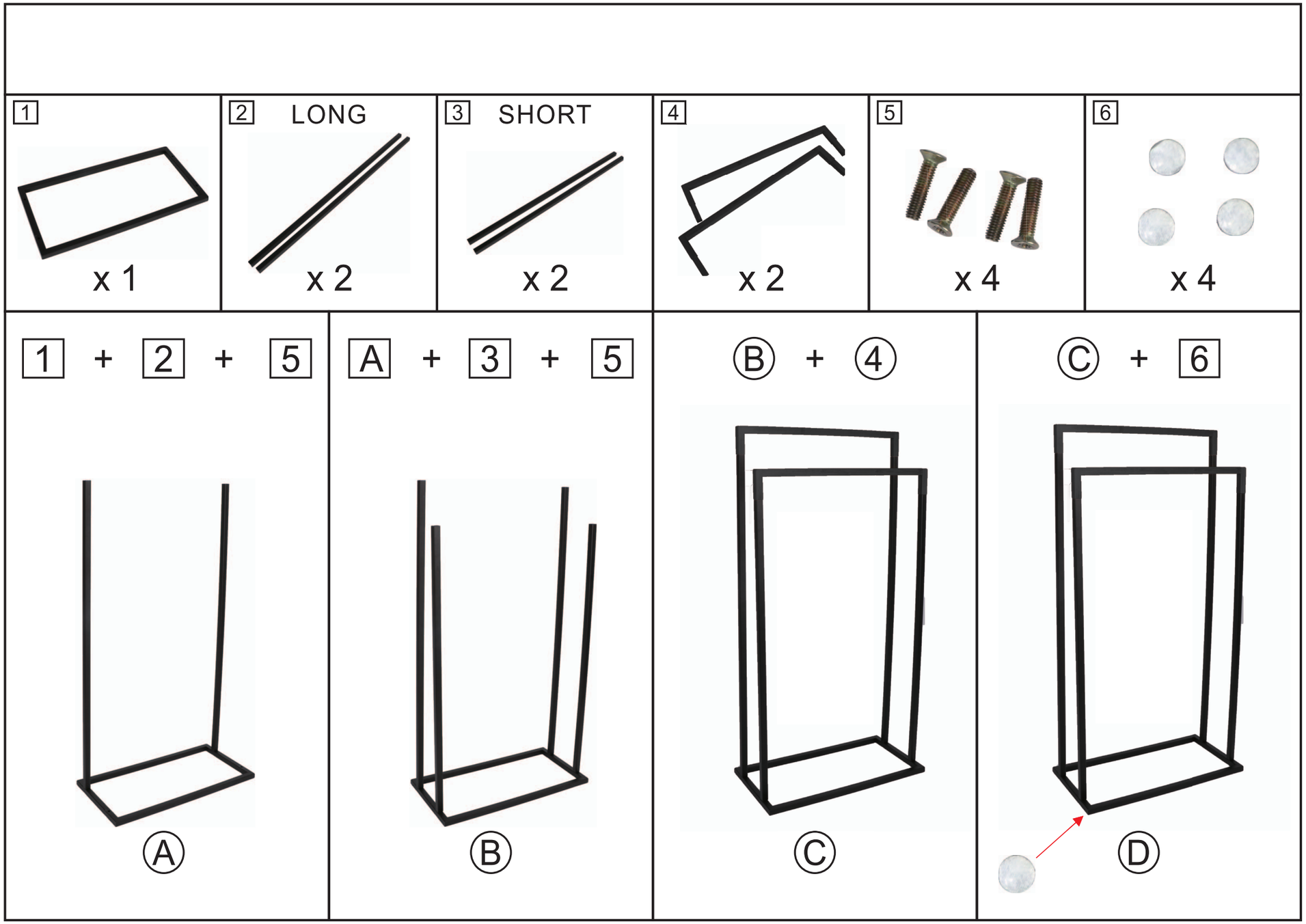

21×29.7cm